THE INFORMATION CONTAINED IN THIS DRAWING IS THE SOLE PROPERTY OF L-COM, INC. ANY REPRODUCTION IN PART OR WHOLE WITHOUT THE WRITTEN PERMISSION OF L-COM, INC. IS PROHIBITED.

| REVISION | | | | | |
|---|---|---|---|---|---|
| ZONE | REV | DESCRIPTION | DATE | CHANGED BY | APPROVED |
| | A | INITIAL RELEASE | 6/28/2023 | DAVIDG | DAVIDG |

Overview
Bandwidth: 500MHz
OD:3.5mm
Conductor: 28AWG
Approvals: RoHS
Connector: 50U" gold plated RJ45 connector

Physical Characteristics
- Cable Type: CAT6A UTP
- Connector Type(s): RJ45
- Wiring Scheme: T568B
- Temperature Rating
  - Installation: 0°C ~ 50°C
  - Operation: -20°C ~ 60°C
- Voltage Rating: 30V

Conductor (Qty, 4 twisted pair)
- Conductor Type: 28AWG(7/0.12±0.008mm), Stranded Bare Copper.
- Insulation: HDPE
- Diameter: 0.61±0.05mm
- Pair Identification:
  - Pair1 = Orange, Orange-White
  - Pair2 = Blue, Blue-White
  - Pair3 = Green, Green-White
  - Pair4 = Brown, Brown-White

Connector Type (Qty, 2)
- Connector Type: 8P8C (RJ45)
- Gender: Plug
- Connector Material: PC(94-V0)
- Contact Material: Copper Alloy, Gold Plating-50µm
- Hood Material: Transparent Assemble Boot

Overall Cable
- Jacket: CM PVC
- Minimum Average Thickness: 0.60mm
- Outer Diameter: 3.5±0.2mm

Electrical Characteristics
- Conductor DC Resistance: 28.4Ω/100m Max.
- Impedance: 100Ω
- Capacitance: 5600pf/100m
- Propagation Delay: 545ns/100m Max.
- Delay Skew: 45ns/100m Max.
- Pass Fluke DSX 8000 ISO Patch Cord Test (100%)

Miscellaneous
- Cable Assembly To Be Tested For Continuity
- Cable Assembly To Be Individually Packaged

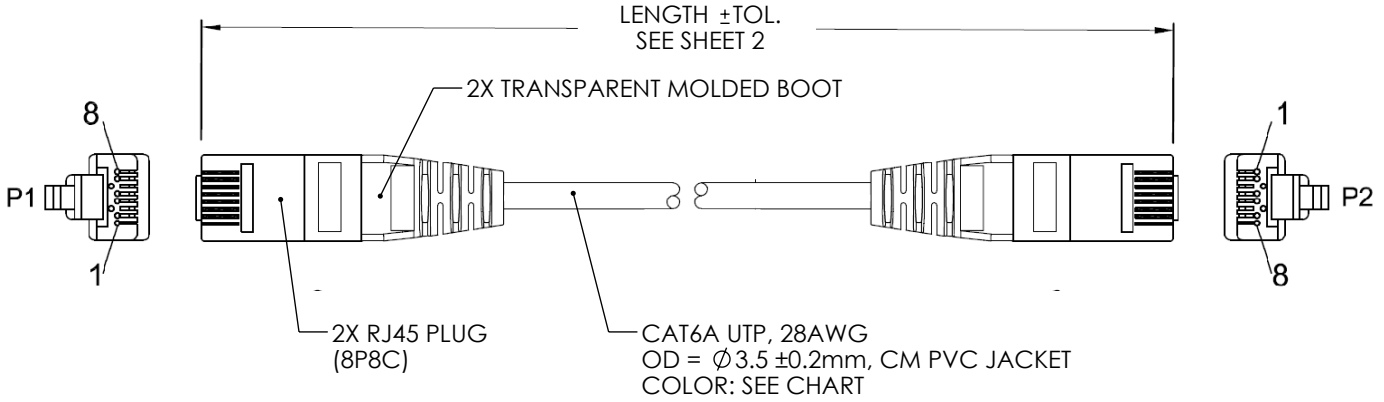


WIRING MAP

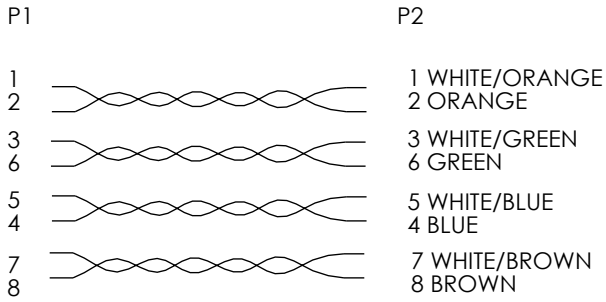


| UNLESS OTHERWISE SPECIFIED, DIMENSIONS ARE IN INCHES [mm] | APPROVALS | DATE |
|---|---|---|
| OVERALL CABLE LENGTH TOLERANCE: ≤12 [305] = +1 [25] / -0; >12 [305] ≤60 [1524] = +2 [51] / -0; >60 [1524] ≤120 [3048] = +4 [102] / -0; >120 [3048] ≤300 [7620] = +6 [152] / -0; >300 [7620] = +5% / -0 | DRAWN BY KDANG | 6/1/2023 |
| ALL OTHER DIMENSIONAL TOLERANCES: .X = ± .2 [5], .XX = ± .02 [.5], .XXX = ± .005 [.13]; FRACTIONS ± 1/32, ANGLES ± 1° | CHECKED BY DAVIDG | 6/5/2023 |
| THIRD-ANGLE PROJECTION | APPROVED BY DAVIDG | 6/5/2023 |
| CONFIGURATION DETAILS OF UNDIMENSIONED FEATURES MAY VARY | | |
| COLOR VARIATIONS MAY OCCUR | | |

L-com an INFINITE brand
50 High Street, West Mill,
North Andover, MA 01845 USA.
Phone: 1.800.341.5266
1.978.682.6936

CATEGORY: TELECOM/MODULAR

PRODUCT DESCRIPTION: Category 6A 10Gig Component Tested Slim Ethernet Cable Assembly

| SIZE | CAGE CODE | ITEM NO. | REV. |
|---|---|---|---|
| A | 43321 | TRD695ACL | A |

SCALE: NONE | CAD FILE: TRD695ACL.SLDDRW | SHEET 1 OF 2

THE INFORMATION CONTAINED IN THIS DRAWING IS THE SOLE PROPERTY OF L-COM, INC. ANY REPRODUCTION IN PART OR WHOLE WITHOUT THE WRITTEN PERMISSION OF L-COM, INC. IS PROHIBITED.

| PART NUMBER | COLOR | LENGTH FEET [METERS] | TOLERANCE INCH [mm] |
|---|---|---|---|
| TRD695ACL-BLK-05F | BLACK | 0.5 [0.15] | +1.38/-.59 [+35/-15] |
| TRD695ACL-BLK-1F | BLACK | 1.0 [0.30] | +1.38/-.59 [+35/-15] |
| TRD695ACL-BLK-3F | BLACK | 3.0 [0.91] | +1.38/-.59 [+35/-15] |
| TRD695ACL-BLK-5F | BLACK | 5.0 [1.52] | +1.38/-.79 [+35/-20] |
| TRD695ACL-BLK-10F | BLACK | 10.0 [3.04] | +1.38/-1.18 [+35/-30] |
| TRD695ACL-BLK-15F | BLACK | 15.0 [4.57] | +1.38/-1.18 [+35/-30] |
| TRD695ACL-BLK-20F | BLACK | 20.0 [6.09] | ± 2.36[ 60] |
| TRD695ACL-BLK-25F | BLACK | 25.0 [7.62] | ± 2.36[ 60] |

| PART NUMBER | COLOR | LENGTH FEET [METERS] | TOLERANCE INCH [mm] |
|---|---|---|---|
| TRD695ACL-BLU-05F | BLUE | 0.5 [0.15] | +1.38/-.59 [+35/-15] |
| TRD695ACL-BLU-1F | BLUE | 1.0 [0.30] | +1.38/-.59 [+35/-15] |
| TRD695ACL-BLU-3F | BLUE | 3.0 [0.91] | +1.38/-.59 [+35/-15] |
| TRD695ACL-BLU-5F | BLUE | 5.0 [1.52] | +1.38/-.79 [+35/-20] |
| TRD695ACL-BLU-10F | BLUE | 10.0 [3.04] | +1.38/-1.18 [+35/-30] |
| TRD695ACL-BLU-15F | BLUE | 15.0 [4.57] | +1.38/-1.18 [+35/-30] |
| TRD695ACL-BLU-20F | BLUE | 20.0 [6.09] | ± 2.36[ 60] |
| TRD695ACL-BLU-25F | BLUE | 25.0 [7.62] | ± 2.36[ 60] |

| PART NUMBER | COLOR | LENGTH FEET [METERS] | TOLERANCE INCH [mm] |
|---|---|---|---|
| TRD695ACL-GRY-05F | GRAY | 0.5 [0.15] | +1.38/-.59 [+35/-15] |
| TRD695ACL-GRY-1F | GRAY | 1.0 [0.30] | +1.38/-.59 [+35/-15] |
| TRD695ACL-GRY-3F | GRAY | 3.0 [0.91] | +1.38/-.59 [+35/-15] |
| TRD695ACL-GRY-5F | GRAY | 5.0 [1.52] | +1.38/-.79 [+35/-20] |
| TRD695ACL-GRY-10F | GRAY | 10.0 [3.04] | +1.38/-1.18 [+35/-30] |
| TRD695ACL-GRY-15F | GRAY | 15.0 [4.57] | +1.38/-1.18 [+35/-30] |
| TRD695ACL-GRY-20F | GRAY | 20.0 [6.09] | ± 2.36[ 60] |
| TRD695ACL-GRY-25F | GRAY | 25.0 [7.62] | ± 2.36[ 60] |

L-COM an INFINITE brand
50 High Street, West Mill,
North Andover, MA 01845 USA.
Phone: 1.800.341.5266
1.978.682.6936

CATEGORY
TELECOM/MODULAR

PRODUCT DESCRIPTION
Category 6A 10Gig Component Tested Slim Ethernet Cable Assembly

| SIZE | CAGE CODE | ITEM NO. | REV. |
|---|---|---|---|
| A | 43321 | TRD695ACL | A |

SCALE: NONE | CAD FILE: TRD695ACL.SLDDRW | SHEET 2 OF 2