THE INFORMATION CONTAINED IN THIS DRAWING IS THE SOLE PROPERTY OF L-COM, INC. ANY REPRODUCTION IN PART OR WHOLE WITHOUT THE WRITTEN PERMISSION OF L-COM, INC. IS PROHIBITED.

REVISION					
ZONE	REV	DESCRIPTION	DATE	CHANGED BY	APPROVED
	A	INITIALRELEASE	03/09/2023	SREITER	AGANWANI

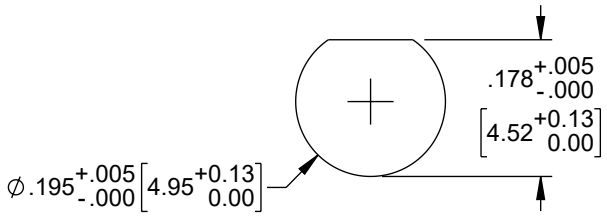

RECOMMENDED
MOUNTING HOLE

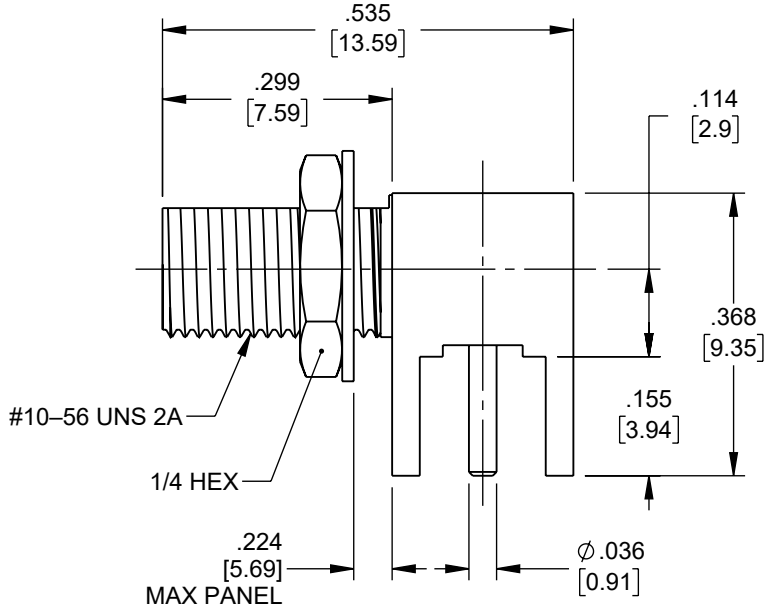

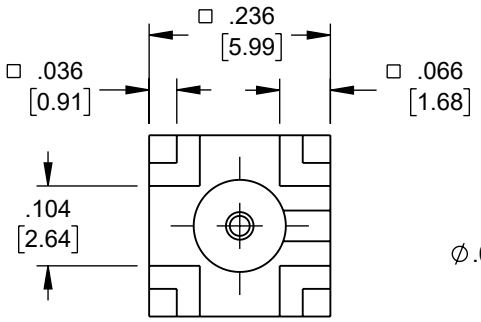

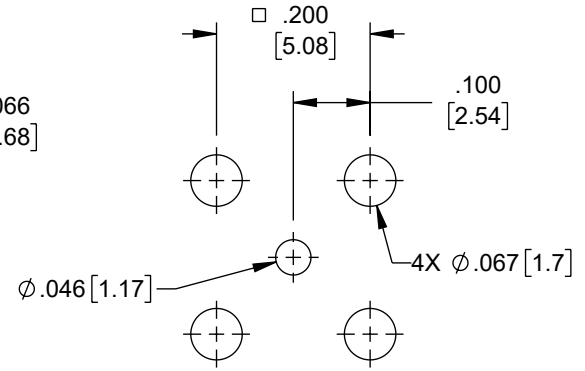

RECOMMENDED
MTG HOLE PATTERN

NOTES:

ELECTRICAL DATA:
1. IMPEDANCE: 50Ω
2. FREQUENCY RANGE: DC TO 6GHz

MECHANICAL:
1. BODY: BRASS, GOLD PLATED
2. CONTACT: BRASS, GOLD PLATED
3. INSULATION: PTFE

ALL DIMENSIONS FOR REFERENCE ONLY.

REGULATORY COMPLIANCE:
EU RoHS DIRECTIVE (MOST RECENT RELEASED VERSION)

UNLESS OTHERWISE SPECIFIED, DIMENSIONS ARE IN INCHES [mm]
OVERALL CABLE LENGTH TOLERANCE:
≤12 [305] = +1 [25] / -0
>12 [305] ≤60 [1524] = +2 [51] / -0
>60 [1524] ≤120 [3048] = +4 [102] / -0
>120 [3048] ≤300 [7620] = +6 [152] / -0
>300 [7620] = +5% / -0
ALL OTHER DIMENSIONAL TOLERANCES:
.X = ± .2 [5]
.XX = ± .02 [.5]
.XXX = ± .005 [.13]
FRACTIONS ± 1/32
ANGLES ± 1°
THIRD-ANGLE PROJECTION

APPROVALS	DATE
DRAWN BY SREITER	03/09/2023
CHECKED BY DWANG	03/30/2023
APPROVED BY AGANWANI	03/30/2023

CONFIGURATION DETAILS OF UNDIMENSIONED FEATURES MAY VARY

COLOR VARIATIONS MAY OCCUR

L-com an INFINITE brand
50 High Street, West Mill,
North Andover, MA 01845 USA.
Phone: 1.800.341.5266
1.978.682.6936

CATEGORY
PCB CONNECTOR

PRODUCT DESCRIPTION
RP MCX JACK RIGHT ANGLE BULKHEAD CONNECTOR SOLDER ATTACHMENT THRU HOLE PCB, .177 INCH D HOLE

SIZE	CAGE CODE	ITEM NO.	REV.
A	43321	RFPCB-MCX-FR-6G-110	A

SCALE: NONE | CAD FILE: RFPCB-MCX-FR-6G-110.SLDDRW | SHEET 1 OF 1

T-Rev.D1