REVISION					
ZONE	REV	DESCRIPTION	DATE	CHANGED BY	APPROVED
	A	INITIAL RELEASE	10/01/2024	KGLEBOVA	AGANWANI

ASSEMBLY PROCEDURE

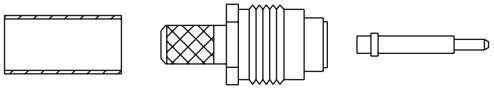

1 2 3

1. STRIP CABLE AS SHOWN. DO NOT NICK CENTER CONDUCTOR. TIN CENTER CONDUCTOR.
2. SLIDE FERRULE (1) OVER CABLE. FLAIR BRAID & SLIDE WEDGE ASSEMBLY (2) UNDER BRAID WITH CENTER CONDUCTOR PROTRUDING THROUGH HOLE IN INSULATOR. SLIDE FERRULE (1) OVER BRAID & AGAINST CLAMP NUT (2). CRIMP FERRULE.
3. SOLDER CONTACT (3) TO CENTER CONDUCTOR. CLEAN, INSERT CABLE ASSEMBLY INTO BODY & TIGHTEN.

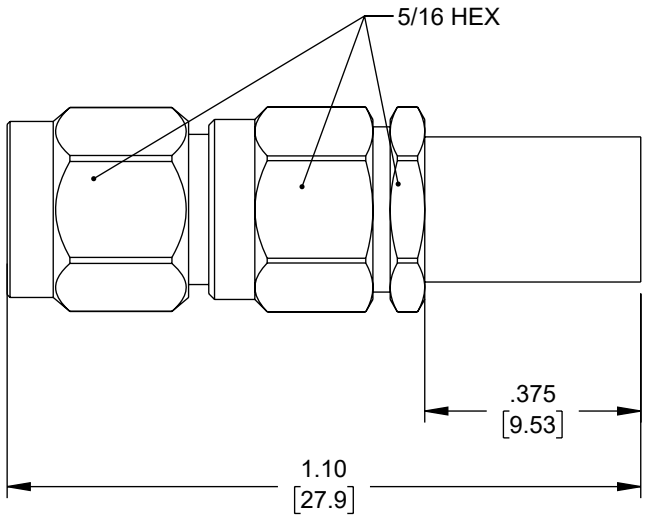

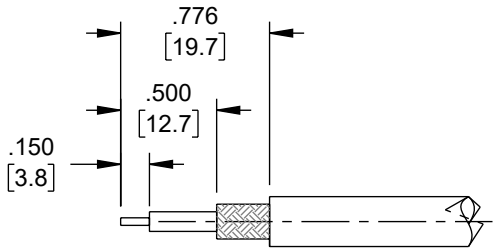

RECOMMENDED
STRIPPING DIMENSIONS

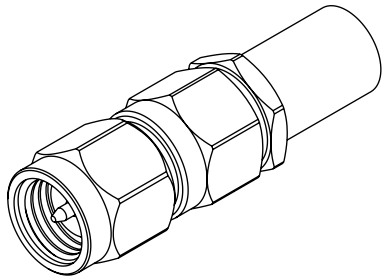

CRIMP SIZE REQUIRED:

CONTACT: SOLDER.
FERRULE: .213 [5.41] HEX CRIMP TOOL.

THE INFORMATION CONTAINED IN THIS DRAWING IS THE SOLE PROPERTY OF INFINITE ELECTRONICS, INC. ANY REPRODUCTION IN PART OR WHOLE WITHOUT THE WRITTEN PERMISSION OF INFINITE ELECTRONICS, INC. IS PROHIBITED. THESE COMMODITIES, TECHNOLOGY OR SOFTWARE WERE EXPORTED FROM THE UNITED STATES IN ACCORDANCE WITH THE EXPORT ADMINISTRATION REGULATIONS. DIVERSION CONTRARY TO U.S. LAW PROHIBITED.

UNLESS OTHERWISE SPECIFIED
LEADING DIMENSIONS ARE INCHES
DIMENSIONS IN [ ] ARE MILLIMETERS

TOLERANCES:

.X = ±.2 [5] | FRACTIONS ± 1/32
.XX = ±.02 [0.5] | ANGLES ± 1°
.XXX = ±.005 [0.13]

CABLE LENGTH TOLERANCES:
≤12 [305] = +1 [25] / -0
>12 [305] ≤ 60 [1524] = +2 [51] / -0
>60 [1524] ≤ 120 [3048] = +4 [102] / -0
>120 [3048] ≤ 300 [7620] = +6 [152] / -0
>300 [7620] = +5% / -0

ALL DIMENSIONS ARE FOR REFERENCE ONLY AND SUBJECT TO CHANGE WITHOUT NOTICE.
UN-DIMENSIONED/NON-CRITICAL FEATURES MAY VARY IN SIZE AND LOCATION
COLORS MAY VARY

L-com®
an INFINITE brand
Website: www.L-com.com
Phone: 1.800.341.5266 | 1.978.682.6936

INTERPRET ALL DIMENSIONS AND TOLERANCES PER ASME Y14.5

SCALE	SHEET
NONE	1 OF 1

DESCRIPTION
SMA MALE CONNECTOR CRIMP/SOLDER (CAPTIVE CONTACT) ATTACHMENT FOR RG55, RG141, RG142, RG223, RG400

SIZE	CAGE CODE	DRAWN BY	ITEM NO.	REV
A	43321	KGLEBOVA	LCCN3246	A

LC DS Rev-D4 Asize